IGBT SNUBBER CAPACITORS – JF1L

FEATURES

- Extended double metallized polyester electrodes
- with metallized polypropylene dielectric internal series connection
- UL 94 V-0 plastic case with thermosetting resin-fill
- It has a tinned brass lug direct JF1L mounting

TYPICAL APPLICATIONS

These capacitors are used in high voltage, high current
And high pulse applications such as:
IGBT protection circuits & Snubber networks
Energy conversion and control in power electronics
Protection circuits in SMPS

Outline Drawing (For Example)

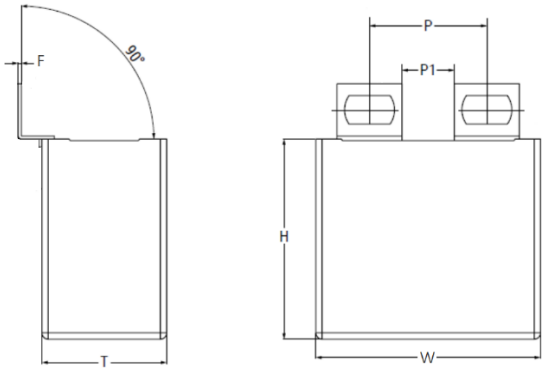

SPECIFICATIONS

Reference Standard	GB/T 17702 (IEC 61071)				
Climatic Category	40/85/56				
Maximum permissible case temperature (T_{case})	-40℃～+85℃				
Capacitance Range	0.047μF ～ 9μF				
Rated Voltage (U_N)	630Vdc	700Vdc	850Vdc	1000Vdc	1200Vdc
	1600Vdc	1700Vdc	2000Vdc	2500Vdc	3000Vdc
Capacitance Tolerance	±5%(J)、±10%(K)				
Dissipation Factor	≤ 10 x 10^{-4} at 1kHz, 1Vrms				
Insulation Resistance	C_N ≤ 0.33μF, IR ≥ 15 000MΩ C_N > 0.33μF, IR x C_R ≥ 5 000s			25℃, 100Vdc, 60 seconds	

ELECTRICAL CHARACTERISTICS

Withstanding voltage (V_{TT})		1.5 x U_{NDC} for 10 s, cut off current 10 mA	
Insulation Resistance (IR x C_N)		C_N ≤ 0.33μF, IR ≥ 15 000MΩ C_N > 0.33μF, IR x C_R ≥ 5 000s (25℃, 100Vdc, 60 seconds)	
Surge Voltage		1.5 * V_{NDC} for maximum 10 times in lifetime at T = 25°C ±5°C	
Over voltage	1.1 x U_N	Maximum duration within one day	30% of on-load duration
	1.15 x U_N		30 minutes
	1.2 x U_N		5 minutes
	1.3 x U_N		1 minutes
Self Inductance (L_S)		< 1nH per mm of lead spacing)	
Maximum peak current ↑ (A)		↑ = C x dV/dt	

IGBT SNUBBER CAPACITORS – JF1L

DIMENSIONS (mm)

630VDC/700VDC (420VAC)								
Cap. μF	W±1.0	H±1.0	T±1.0	dV/dt	IPEAK	ESR @100kHz	LS	Imax @100kHz
				(V/us)	(A)	(mΩ)	(nH)	(A)
0.68	37	25	15	900	612	5.0	23	9
1.0	37	30	16	900	900	5.0	23	12
1.2	37	30	16	900	1080	4.5	23	14
1.5	37	34	20	900	1350	4.5	23	17
1.8	37	34	20	900	1620	4.5	23	18
2.0	42	40	20	600	1200	4.0	29	18
2.2	42	40	20	600	1320	4.0	29	18.5
2.5	42	40	20	600	1500	4.0	29	19
3.0	42	44	24	600	1800	4.0	29	20
3.3	42	44	24	600	1980	3.5	29	20
4.0	42	44	24	600	2400	3.5	29	21
4.7	42	45	30	600	2820	3.5	29	23
5.0	42	45	30	600	3000	3.0	29	23.5
6.0	42	43	42	600	3600	3.0	29	25
6.5	42	43	42	600	3900	3.0	29	26
6.5	57	45	30	360	2340	2.5	33	24
7.0	57	45	30	360	2520	2.5	33	25
8.0	57	50	35	360	2880	2.5	33	27
9.0	57	50	35	360	3240	2.5	33	29

Notes
(1) The symbol + means capacitance tolerance (J=±5%, K=±10%)
(2) The symbol * means style of solder slice
(3) The symbol ## means distance of hole
(4) Rated voltage pulse slope (Dv/dt) at voltage UNDC
(5) Maximum RMS current at 100 kHz, θamb=70 °C (cooling-air temperature), Δθcase=15°C (container temperature rise)
(6) Equivalent series resistance and LS are typical values at f = 100 kHz

IGBT SNUBBER CAPACITORS – JF1L

DIMENSIONS (mm)

850VDC (450VAC)								
Cap. μF	W±1.0	H±1.0	T±1.0	dV/dt (V/us)	I_{PEAK} (A)	ESR @100kHz (mΩ)	L_S (nH)	I_{max} @100kHz (A)
0.47	37	25	15	1200	564	5.0	23	9
0.68	37	30	16	1200	816	5.0	23	12
1.0	37	34	20	1200	1200	5.0	23	14
1.2	37	34	20	1200	1440	5.0	23	16
1.5	37	34	20	1200	1880	5.0	23	18
1.5	42	40	20	750	1125	4.5	29	18.5
2.0	42	40	20	750	1500	4.5	29	19
2.2	42	40	20	750	1650	4.5	29	19.5
2.5	42	44	24	750	1875	4.5	29	20
3.0	42	44	24	750	2250	4.5	29	21
3.3	42	45	30	750	2475	4.5	29	21.5
4.0	42	43	42	750	3000	4.5	29	22
4.0	57	45	30	450	1800	4.0	33	23
4.7	57	45	30	450	2115	4.0	33	24.5
5.0	57	45	30	450	2250	4.0	33	25
6.0	57	50	35	450	2700	4.0	33	26
6.5	57	50	35	450	2925	4.0	33	27

Notes
(1) The symbol + means capacitance tolerance (J=±5%, K=±10%)
(2) The symbol * means style of solder slice
(3) The symbol ## means distance of hole
(4) Rated voltage pulse slope (dV/dt) at voltage UNDC
(5) Maximum RMS current at 100 kHz, θamb=70 °C (cooling-air temperature), Δθcase=15°C (container temperature rise)
(6) Equivalent series resistance and LS are typical values at f = 100 kHz

IGBT SNUBBER CAPACITORS – JF1L

DIMENSIONS (mm)

1000VDC (500VAC)								
Cap. μF	W±1.0	H±1.0	T±1.0	dV/dt (V/us)	I_{PEAK} (A)	ESR @100kHz (mΩ)	L_S (nH)	I_{max} @100kHz (A)
0.47	37	25	15	1300	611	5.0	23	9
0.68	37	30	16	1300	884	5.0	23	10.5
0.82	37	30	16	1300	1066	5.0	23	12
1.0	37	34	20	1300	1300	4.5	23	15
1.2	37	34	20	1300	1560	4.5	23	17
1.2	42	40	20	850	1020	4.5	29	16
1.5	42	40	20	850	1275	4.5	29	16
2.0	42	44	24	850	1700	4.5	29	17
2.2	42	44	24	850	1870	4.0	29	20
2.5	42	45	30	850	2125	4.0	29	21
3.0	42	45	30	850	2550	4.0	29	21.5
3.3	42	43	42	850	2805	4.0	29	22
3.3	57	45	30	500	1650	4.0	33	20
4.0	57	45	30	500	2000	4.0	33	21
4.7	57	50	35	500	2350	4.0	33	22
5.0	57	50	35	500	2500	4.0	33	23

Notes
(1) The symbol + means capacitance tolerance (J=±5%, K=±10%)
(2) The symbol * means style of solder slice
(3) The symbol ## means distance of hole
(4) Rated voltage pulse slope (dV/dt) at voltage UNDC
(5) Maximum RMS current at 100 kHz, θamb=70 °C (cooling-air temperature), Δθcase=15°C (container temperature rise)
(6) Equivalent series resistance and LS are typical values at f = 100 kHz

IGBT SNUBBER CAPACITORS – JF1L

DIMENSIONS (mm)

1200VDC (600VAC)								
Cap. μF	W±1.0	H±1.0	T±1.0	dV/dt	I_{PEAK}	ESR @100kHz	L_S	I_{max} @100kHz
				(V/us)	(A)	(mΩ)	(nH)	(A)
0.33	37	25	15	1500	495	4.5	23	9
0.47	37	30	16	1500	705	4.5	23	11
0.68	37	34	20	1500	1020	4.5	23	12.5
0.75	37	34	20	1500	1125	4.5	23	13
0.82	42	40	20	950	779	4.0	29	14.5
1.0	42	40	20	950	950	4.0	29	16
1.2	42	44	24	950	1140	4.0	29	19
1.5	42	44	24	950	1425	4.0	29	19.5
2.0	42	45	30	950	1900	4.0	29	20
2.2	42	43	42	950	2090	4.0	29	21
2.5	42	43	42	950	2375	4.0	29	22
2.2	57	45	30	600	1320	3.8	33	20
2.5	57	45	30	600	1500	3.8	33	21
3.0	57	45	30	600	1800	3.8	33	22
3.3	57	50	35	600	1980	3.8	33	23
4.0	57	50	35	600	2400	3.8	33	24

Notes
(1) The symbol + means capacitance tolerance (J=±5%, K=±10%)
(2) The symbol * means style of solder slice
(3) The symbol ## means distance of hole
(4) Rated voltage pulse slope (dV/dt) at voltage UNDC
(5) Maximum RMS current at 100 kHz, θamb=70 °C (cooling-air temperature), Δθcase=15°C (container temperature rise)
(6) Equivalent series resistance and LS are typical values at f = 100 kHz

IGBT SNUBBER CAPACITORS – JF1L

DIMENSIONS (mm)

1600VDC(650VAC)								
Cap. μF	W±1.0	H±1.0	T±1.0	dV/dt	I_{PEAK}	ESR @100kHz	L_S	I_{max} @100kHz
				(V/us)	(A)	(mΩ)	(nH)	(A)
0.22	37	25	15	1900	418	6.0	23	8
0.33	37	30	16	1900	627	6.0	23	10
0.39	37	34	20	1900	741	5.5	23	12
0.47	37	34	20	1900	893	5.5	23	14
0.68	42	40	20	1250	850	4.0	29	16
0.82	42	44	24	1250	1025	4.0	29	19
1.0	42	45	30	1250	1250	4.0	29	19.5
1.2	42	45	30	1250	1500	4.0	29	20
1.5	42	43	42	1250	1875	4.0	29	21
1.5	57	45	30	750	1125	3.5	33	22
2.0	57	50	35	750	1500	3.5	33	24

Notes
(1) The symbol + means capacitance tolerance (J=±5%, K=±10%)
(2) The symbol * means style of solder slice
(3) The symbol ## means distance of hole
(4) Rated voltage pulse slope (dV/dt) at voltage UNDC
(5) Maximum RMS current at 100 kHz, θamb=70 °C (cooling-air temperature), Δθcase=15°C (container temperature rise)
(6) Equivalent series resistance and LS are typical values at f = 100 kHz

IGBT SNUBBER CAPACITORS – JF1L

DIMENSIONS (mm)

1700VDC (675VAC)								
Cap. μF	W±1.0	H±1.0	T±1.0	dV/dt	IPEAK	ESR @100kHz	LS	Imax @100kHz
				(V/us)	(A)	(mΩ)	(nH)	(A)
0.15	37	25	15	2000	300	7.0	23	7
0.22	37	30	16	2000	440	6.0	23	9
0.33	37	34	20	2000	660	5.5	23	11.5
0.39	37	34	20	2000	780	5.5	23	13
0.47	42	36	24	1260	592	4.0	29	14
0.56	42	36	24	1260	706	4.0	29	15.5
0.68	42	44	24	1260	857	3.5	29	18
0.82	42	44	24	1260	1033	3.5	29	19
1.0	42	45	30	1260	1260	3.5	29	20
1.2	42	43	42	1260	1512	3.5	29	21
1.0	57	45	25	780	780	3.5	33	18
1.2	57	43.5	29.5	780	936	3.5	33	19
1.5	57	50	35	780	1170	3.0	33	22
2.0	57	50	35	780	1560	3.0	33	24
3.0	57	55	45	780	2340	3.0	33	28

Notes
(1) The symbol + means capacitance tolerance (J=±5%, K=±10%)
(2) The symbol * means style of solder slice
(3) The symbol ## means distance of hole
(4) Rated voltage pulse slope (dV/dt) at voltage UNDC
(5) Maximum RMS current at 100 kHz, θamb=70 °C (cooling-air temperature), Δθcase=15°C (container temperature rise)
(6) Equivalent series resistance and LS are typical values at f = 100 kHz

IGBT SNUBBER CAPACITORS – JF1L

DIMENSIONS (mm)

2000VDC (700VAC)								
Cap. μF	W±1.0	H±1.0	T±1.0	dV/dt (V/us)	IPEAK (A)	ESR @100kHz (mΩ)	LS (nH)	Imax @100kHz (A)
0.10	37	25	15	2241	224	8.0	23	7
0.15	37	25	15	2241	336	8.0	23	8.5
0.22	37	30	16	2241	493	6.0	23	10
0.33	37	34	20	2241	740	6.0	23	13
0.47	42	40	20	1300	611	4.0	29	15.5
0.56	42	44	24	1300	728	4.0	29	18
0.68	42	44	24	1300	884	3.5	29	18.5
0.82	42	45	30	1300	1066	3.5	29	19
1.0	42	43	42	1300	1300	3.5	29	21
1.0	57	45	30	850	850	4.0	33	24
1.2	57	45	30	850	1020	4.0	33	23
1.5	57	50	35	850	1275	4.0	33	24

Notes
(1) The symbol + means capacitance tolerance (J=±5%, K=±10%)
(2) The symbol * means style of solder slice
(3) The symbol ## means distance of hole
(4) Rated voltage pulse slope (dV/dt) at voltage UNDC
(5) Maximum RMS current at 100 kHz, θamb=70 °C (cooling-air temperature), Δθcase=15°C (container temperature rise)
(6) Equivalent series resistance and LS are typical values at f = 100 kHz

IGBT SNUBBER CAPACITORS – JF1L

DIMENSIONS (mm)

2500VDC (725VAC)

Cap. μF	W±1.0	H±1.0	T±1.0	dV/dt (V/us)	IPEAK (A)	ESR @100kHz (mΩ)	LS (nH)	Imax @100kHz (A)
0.068	37	25	15	3230	220	8.5	23	6.5
0.10	37	30	16	3230	323	8.5	23	8
0.15	37	34	20	3230	485	8.0	23	11
0.18	37	34	20	3230	581	7.5	23	12.5
0.22	42	40	20	2100	462	4.0	29	14
0.33	42	44	24	2100	693	4.0	29	15.5
0.47	42	45	30	2100	987	3.5	29	18
0.68	42	43	42	2100	1428	3.5	29	18.5
0.68	57	45	30	1200	816	3.5	33	19
1.0	57	50	35	1200	1200	3.5	33	19.5

3000VDC (750VAC)

Cap. μF	W±1.0	H±1.0	T±1.0	dV/dt (V/us)	IPEAK (A)	ESR @100kHz (mΩ)	LS (nH)	Imax @100kHz (A)
0.047	37	25	15	3361	158	8.5	23	7.5
0.068	37	30	16	3361	229	8.0	23	9
0.10	37	34	20	3361	336	7.5	23	10.5
0.15	37	34	20	3361	504	7.0	23	12
0.22	42	40	20	2050	451	5.0	29	13
0.33	42	45	30	2050	677	4.5	29	16.5
0.47	42	43	42	2050	964	4.0	29	18
0.47	42	45	30	1200	564	4.0	33	18.5
0.68	57	50	35	1200	816	4.0	33	19
0.82	57	50	35	1200	984	3.5	33	20

Please visit our website to get more update data, those data & specification are subject to change without notice.

IGBT SNUBBER CAPACITORS – JF1L

CAPACITOR DRAWINGS AND TERMINAL STYLES

Styles1

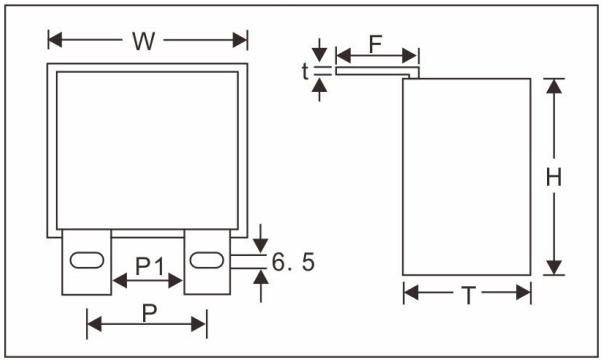

Styles2

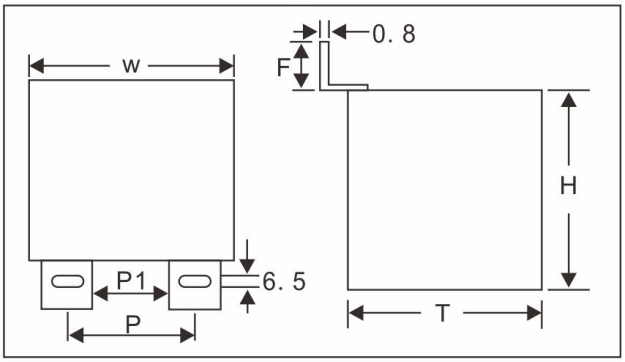

Styles3

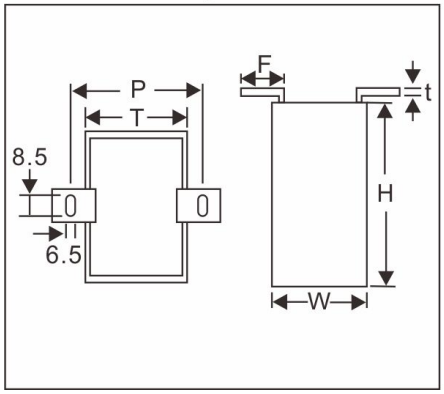

Styles4

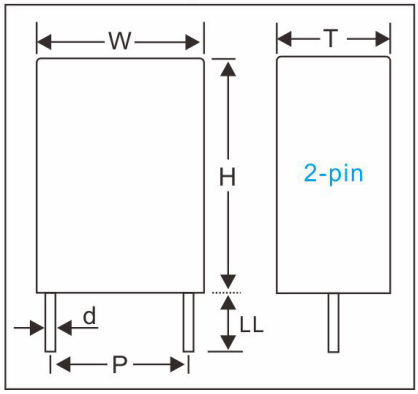

Styles5

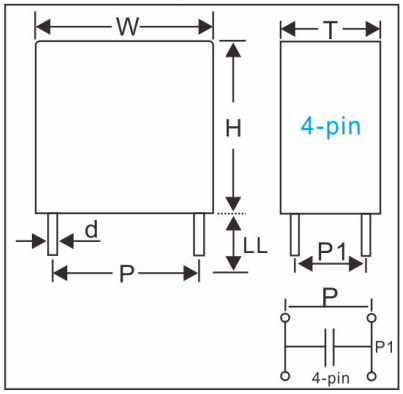

For the Terminal Styles, please contact us for detailed information.

Please visit our website to get more update data, those data & specification are subject to change without notice.